CGC

40/50/55

BUILT TO LAST

CLARK

EST. 1917

Max Load Capacity
8000 / 10000 / 12000 lbs.
(4000 / 5000 / 5500 kg)

CLARK

CGC 40/50/55 STANDARD FEATURES & BENEFITS

BRAKING SYSTEM

- **Simple & Error Proof**
  - Brakes are applied with a hydraulic servo-type power brake valve
  - Transmission disengages when parking brake is set preventing driving against brakes
  - Left pedal used for inching applications

HYDRAULIC SYSTEM

- **Maximum Horsepower**
  - Uses a load-sensing flow control valve for steering to reduce horsepower loss and heat buildup
- **Optimum Performance of Attachments**
  - The main hydraulic valve incorporates adjustable flow controls for tilt and auxiliary functions
- **Sectional Design**
  - Allows for easy addition of extra functions and simplifies service
- **Upright Mounted Load Lowering Valve**
  - Controlled lowering independent of engine speed

THE POWER BEHIND THE PUNCH

- **Field-Proven 4.3L PSI - 4X LPG Engine**
  - Computer controlled fuel system
  - Built for smooth operation
  - Hardened exhaust and intake valves provide long life
- **Auto Shut Down**
  - Protects your investment in the event of excessive engine coolant temperature or low oil pressure. Overheat warning light alerts driver to excessive transmission temperature.
- **Keeping Uptime to a Maximum**
  - System can be simply diagnosed using automotive-style malfunction light and fault codes
- **No Tools Required**
  - In about 30 seconds you have access to the engine
- **EPA Compliant**
  - Electronically controlled LP engine has low emissions

AVAILABLE EQUIPMENT

- Mirrors
- Sideshifters
- Strobe lights
- Backup alarm
- Auxiliary valves
- Rear work light
- Turn signal lights
- Hose adaptations
- Convenience console
- Combination stop/tail/back up lights
- Hydraulic control options
- Bottler's tilt
- Tire options
- Travel speed limit
- Short turning radius counterweight on CGC40
- Pre-cleaner
- Air cleaner safety element
- Reduced height overhead guard

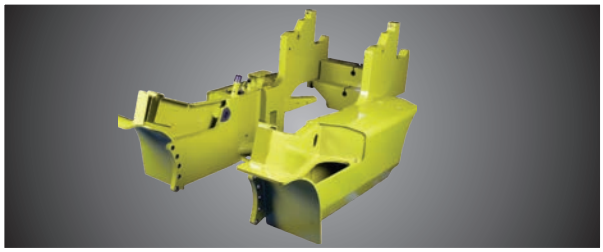

ONE-PIECE FRAME

- Heavy duty, welded, and formed steel plate design protects from impact damage and extends the life of the truck
- Tilt cylinders anchored with heavy frame structure

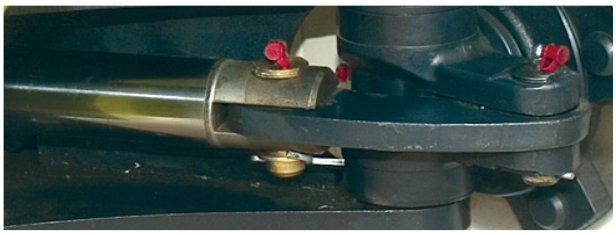

STEERING AXLE

- **Rugged Design**
  - Linkage pivot pins have a “double shear” design to help withstand impact without loosening or breaking
- **Simple Axle Design**
  - Double-ended cylinder provides steering force

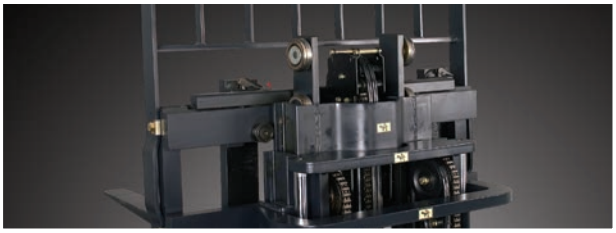

RUGGED UPRIGHT AND CARRIAGE

- **Maximum Visibility**
  - Nested I-Channel allows space for cylinders, hoses and chains
- **Hydraulic Cushioning Valves**
  - Silent staging reduces shock and vibration
- **Shimmable, Sealed & Canted Load Rollers**
  - Carriage has 6 load rollers
  - Maximize load distribution and reduced free play

TRANSAXLE

- **Integral Axle and Transmission**
  - No exposed seals or driveshafts to wear or collect debris
- **Modulated Shift Protection**
  - Smooth engagement, cushioned shifting
- **Common Sump**
  - Allows both axle and transmission lube to be cooled with the transmission cooling system
- **Heavy Duty**
  - Torque converter, clutches and axle gearing extend life and minimizes service requirements
- **Inching Valve**
  - Left inching pedal operation allows for precisely controlled travel speeds during high speed lifting

OPERATOR COMPARTMENT

- **Fully Adjustable, Full Suspension Seat**
  - 2.4” Vertical travel • 20° Backrest adjustment range
  - 6” fore / aft adjustment • Contoured for support
  - Non-cinching, retractable seat belt
- **Thick Molded Floor Mat**
  - Reduces vibration and noise level
  - Improves operator comfort
- **Tilt Steering Column**
  - Adjusts to suit operator and easier entry/exit
- **Fingertip Operation**
  - Electronic directional controls minimize fatigue
- **Extended Seatbelt**
  - Provides additional operator comfort and safety

GENERAL DATA & STANDARD DIMENSIONS

Upright Table

Maximum Fork Height in	mm	Overall Height Lowered in	mm	Free Lift in	mm	Standard Tilt Spec B°/F°
CGC40 Standard						
110	2790	83.3	2117	6.6	168	8/9
• 122	3090	89.2	2267	6.6	168	8/9
145	3690	101.1	2567	6.6	168	5/6
169	4290	112.9	2867	6.6	168	5/6
CGC40 Triple Stage						
170	4330	83.3	2117	57.7	1464.8	5/6
• 188	4780	89.2	2267	63.6	1614.8	5/6
198	5040	98.1	2492	72.4	1839.8	5/3
211	5380	101.0	2567	75.4	191.8	5/3
229	5830	107.0	2717	81.3	2064.8	5/3
253	6430	118.8	3017	93.1	2364.8	3B/0F
CGC50 Standard						
104	2645	83.3	2116	6.6	168	8/9
• 116	2945	89.2	2266	6.6	168	8/9
140	3545	101.0	2566	6.6	168	8/9
163	4145	112.8	2866	6.6	168	5/6
CGC50 Triple Stage						
162	4115	83.3	2116	49.5	1257.7	5/6
• 178	4530	89.2	2266	55.4	1407.7	5/6
190	4830	95.1	2416	61.3	1557.7	5/3
198	5040	101.0	2566	67.2	1707.7	5/3
220	5580	106.0	2716	73.1	1857.7	5/3
243	6180	118.7	3016	84.9	2157.7	3B/0F
CGC40/50 Quad						
240	6096	86.0	2184	56	1422	3B/0F
• 258	6553	97.0	2464	61	1549	3B/0F
273	6934	96.0	2438	66	1676	3B/0F
294	7468	103.0	2616	71	1803	3B/0F
315	8001	110.0	2794	79	2006	3B/0F
336	8534	117.0	2972	85	2159	3B/0F
CGC55 Standard						
100	2545	83.3	2116	7.0	178	8/9
• 112	2845	89.2	2266	7.0	178	8/9
135	3445	101.0	2566	7.0	178	8/9
159	4045	112.8	2866	7.0	178	5/6
CGC55 Triple Stage						
152	3865	83.3	2116	51.2	1300.4	5/6
• 169	4280	89.2	2266	57.1	1450.4	5/6
180	4580	95.1	2416	63.0	1600.4	5/6
192	4870	99.1	2516	66.9	1700.4	5/6
210	5330	107.0	2716	74.8	1900.4	5/3
234	5930	118.7	3016	86.6	2200.4	3B/0F

• Indicates Common Preferred Spec

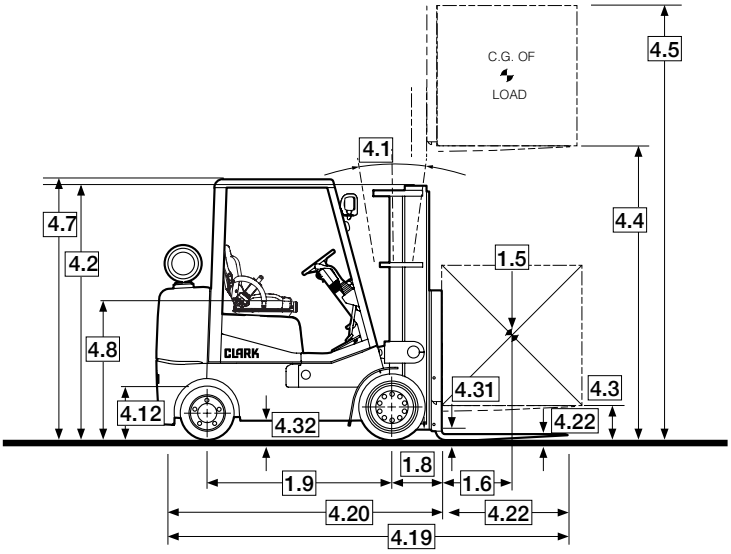

Notes

Production engines and driveline components may vary in output and/or efficiency by ±5%. The performance shown represents nominal values which may be obtained under typical operating conditions of a machine.

ANSI/ITSDF and Insurance Classification

Standard truck meets all applicable mandatory requirements of Part III-ANSI/ITSDF B56.1 Safety Standard for Powered Industrial Trucks and Underwriters Laboratories requirements as to fire hazard only for D and LP classifications. For further information contact a CLARK representative.

Users should be aware of, and adhere to, applicable codes and regulations regarding operator training, use, operation and maintenance of powered industrial trucks, including:

- ANSI/ITSDF B56.1
- NFPA 505, fire safety standard for powered industrial trucks - type designations, areas of use, maintenance and operation.
- Occupational Safety and Health Administration (OSHA) regulations that may apply.

Contact your authorized CLARK forklift truck dealer for further information including operator training programs and auxiliary visual and audible warning systems, fire extinguishers, etc., as available for specific user applications and requirements.

Specifications, equipment, technical data, photos and illustrations are based on information at time of printing and are subject to change without notice. Some products may be shown with optional equipment.

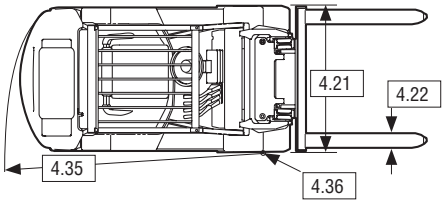

For corresponding data see Specification Chart

& Don't Forget…

Safety Starts With You!

Before operating a lift truck, an operator must:

- Be trained and authorized
- Read and understand operator's manual
- Not operate a faulty lift truck
- Not repair a lift truck unless trained and authorized
- Have the overhead guard and load backrest extension in place
- Perform daily inspections

During operation, a lift truck operator must:

- Wear a seat belt
- Keep entire body inside truck cab
- Never carry passengers or lift people
- Keep truck away from people and obstructions
- Travel with lift mechanism as low as possible and tilted back
- Allow safe stopping distance and come to a complete stop before leaving operator compartment

To park a lift truck, an operator must:

- Completely lower forks or attachments
- Shift into neutral
- Turn key off
- Set parking brake

Highly Maneuverable, Easily Serviceable, Broadly Flexible, Extremely Dependable

The CGC 40/50/55 series proudly adds to CLARK's unique history of building the best forklifts with evolutionary steps in ergonomics, power, safety, durability and performance. These models, designed for distribution, manufacturing and warehousing of all types, all suited for the toughest applications.

STANDARD SPECIFICATIONS CGC 40/50/55

Specifications	1.1	Manufacturer		CLARK	CLARK
	1.2	Manufacture's Designation		CGC 40	CGC 50
	1.3	Drive unit Diesel, L.P Gas		LPG	LPG
	1.4	Operator type stand on / driver seated		Rider counterbalanced	Rider counterbalanced
	1.5	Load capacity / rated load	lbs(kg)	8,000 (4000)	10,000 (5000)
	1.6	Load center distance	in(mm)	24 (600)	24 (600)
	1.7	Load center distance, center of drive axle to fork face	in(mm)	STD 17.3 (439) I TSU 18.1 (460)	STD 17.8 (452) I TSU 18.6 (472)
	1.9	Wheels (x=driven)	in(mm)	61.8 (1570)	70.5 (1790)
Weight	2.1	Service weight	lbs(kg)	12,921 (5861)	14,852 (6737)
	2.2	Axle loading, loaded front / rear	lbs(kg)	18,429 / 2,492 (8359 / 1130)	22,431 / 2,421 (10175 / 1098)
	2.3	Axle loading, unloaded front / rear	lbs(kg)	5,084 / 7,837 (2306 / 3555)	6,504 / 8,348 (2950 / 3787)
Tires	3.1	Tire type, P= pneumatic, SE = solid pneu, C= cushion		Cushion	Cushion
	3.2	Tire size, front	in	22 x 9 x 16	22 x 12 x 16
	3.3	Tire size, rear	in	18 x 6 x 12.2	22 x 7 x 16
	3.5	Wheels, number front / rear (x=drive wheels)		2x / 2	2x / 2
	3.6	Tread, front	in(mm)	41.8 (1062)	43.8 (1113)
	3.7	Tread, rear	in(mm)	44.0 (1118)	43.0 (1098)
Dimensions	4.1	Tilt of upright / fork carriage, back / forward, a / b	degrees	STD 8 / 9 I TSU 5 /6	STD 8 / 9 I TSU 5 /6
	4.2	Height, upright lowered	in(mm)	STD 89.1 (2264) I TSU 89.0 (2260)	STD 90 (2286) I TSU 89.5 (2273)
	4.3	Freelift	in(mm)	STD 6.5 (165) I TSU 63.0 (1626)	STD 6.5 (165) I TSU 55.0 (1408)
	4.4	Light height	in(mm)	STD 122 (3099) I TSU 188 (4775)	STD 116 (2946) I TSU 178 (4521)
	4.5	Height, upright extended	in(mm)	STD 170 (4318) I TSU 236 (5994)	STD 164 (4165) I TSU 226 (5740)
	4.7	Height overhead guard	in(mm)	87.2 (2215)	87.2 (2215)
	4.8	Seat height	in(mm)	45.25 (1150)	45.25 (1150)
	4.12	Coupling height	in(mm)	13.25 (337)	13.25 (337)
	4.19	Overall length	in(mm)	138 (3505)	153.2 (3891)
	4.20	Length to face of forks	in(mm)	STD 96.0 (2438) I TSU 96.8 (2459)	STD 105.2 (2672) I 106.0 (2692)
	4.21	Width	in(mm)	50.8 (1290)	54.8 (1392)
	4.22	Fork dimensions	in(mm)	2 x 5 x 42 (50 x 127 x 1067)/III	2 x 6 x 48 (50 x 152 x 1220)/III
	4.23	Fork carriage		Hook Type	Hook Type
	4.24	Fork carriage width	in(mm)	41 (1041)	49 (1245)
	4.31	Ground clearance minimum, loaded	in(mm)	3.8 (96)	3.8 (96)
	4.32	Ground clearance center of wheelbase	in(mm)	6.1 (155)	6.1 (155)
	4.34	Right Angle Stack (add load length and clearance)	in(mm)	STD 106.7 (2710) I TSU 107.5 (2731)	STD 116.0 (2946) I TRU 116.8 (2967)
	4.35	Outside turning radius	in(mm)	89.4 (2270)	98.2 (2494)
	4.36	Inside turning radius	in(mm)	13.2	12.5
Performance	5.1	Travel speed loaded / unloaded	mph (kph)	12.2/12.5 (19.6 / 20.1)	12.1 /12.4 (19.5/20.0)
	5.2	Lift speed loaded / unloaded	fpm (ms)	STD 101/112 (.51/.57) I TSU 97/108 (.49/.55)	STD 89/111 (.45/.56) I TSU 90/105 (.45/.53)
	5.3	Lowering speed loaded / unloaded	fpm (ms)	STD 78.1/72.8 (.40/.37) I TSU 83/80 (.42/.41)	STD 78/92 (.39/.47) I TSU 80/80 (.41/.41)
	5.6	Max. drawbar pull loaded / unloaded	lbs(N)	5,250/ 2,380 (23350 / 10580)	5,000 / 3,125 (22240 / 13900)
	5.8	Max. gradeability loaded / unloaded	%	27.1 / 15.4	20.1 (18.0)
	5.10	Service brake		Power assist disc	Power assist disc
Drive line	7.1	Manufacturer / Type		PSI - 4X 4.3L LPG	PSI - 4X 4.3L LPG
	7.2	Rated output per SAE J1349	HP/kw @ rpm	110 / 82.0 @ 2400	110 / 82.0 @ 2400
	7.3	Rated speed	rpm	2,400	2,400
	7.4	No. of cylinders / displacement	cu. in. -Liters	6 / 262 - 4.3	6 / 262 - 4.3
	8.2	Operating pressure for attachments	psi/bar	Adjustable	Adjustable
	8.4	Sound level, driver's ear	dB(A)	81	81

1.1	CLARK
1.2	CGC 55
1.3	LPG
1.4	Rider counterbalanced
1.5	12,000 (5500)
1.6	24 (600)
1.8	STD 18.4 (467) I TSU 19.2 (488)
1.9	70.5 (1790)
2.1	16,881 (7657)
2.2	25,942 / 2,939 (11767 / 1333)
2.3	6,720 / 10,161 (3048 / 4609)
3.1	Cushion
3.2	22 x 12 x 16
3.3	22 x 7 x 16
3.5	2x / 2
3.6	43.8 (1113)
3.7	43.0 (1098)
4.1	STD 8 / 9 I TSU 5 /6
4.2	STD 90 (2286) I TSU 89.5 (2273)
4.3	STD 6.9 (175) I TSU 57.0 (1448)
4.4	STD 112 (2845) I TSU 169 (4293)
4.5	STD 160 (4064) I TSU 217 (5512)
4.6	87.2 (2215)
4.8	45.25 (1150)
4.12	13.25 (337)
4.19	155.9 (3960)
4.20	STD 107.9 (2741) I 108.7 (2761)
4.21	54.8 (1392)
4.22	2.25 x 6 x 48 (57 x 152 x 1220)/IV
4.23	Hook Type
4.24	49 (1245)
4.31	3.8 (96)
4.32	6.1 (155)
4.34	STD 118.3 (3005) I TRU 119.1 (3025)
4.35	99.9 (2537)
4.36	12.5
5.1	11.7 /12.2 (18.8/19.6)
5.2	STD 76.1/111 (.39/.56) I TSU 82/103 (.42/.52)
5.3	STD 77/89 (.39/.45) I TSU 75/78 (.38/.40)
5.6	4,750 / 3,205 (21130 / 14255)
5.8	18.2 / 16.1
5.10	Power assist disc
7.1	PSI - 4X 4.3L LPG
7.2	110 / 82.0 @ 2400
7.3	2,400
7.4	6 / 262 - 4.3
8.2	Adjustable
8.4	81

BUILT TO LAST®

CGC

IC-CUSHION
LPG

8000 / 10,000 / 11,000 lbs
(4000 / 5000 / 5500 kg)

CLARK: The Innovative and Durable Solution

The design, development, and manufacturing capabilities of CLARK, in combination with an unparalleled focus on customer support, a drive to understand fully each customer's needs in order to then supply the right solution, reflect the key essence of what is CLARK.

With over one million CLARK lift trucks sold around the world, each is a testament to the CLARK time-tested process of designing durable trucks with precise features that meet, if not exceed, the material handling needs of our customers. Our full range of highly dependable products – from pallet jacks to electric narrow aisle order selectors and up to our big 18,000lb capacity lift trucks – assures end-users CLARK has the solutions for their day-to-day needs.

These customer-focused solutions built from numerous industry innovations – from the nested I-Beam to a self-activating parking brake to new on-board diagnostics – and it all began the same way: with the needs of our customers foremost in mind. By focusing on how we can improve our customers' material handling processes, combined with award-winning dealers and parts support, we assure our customers a lift truck designed to be the right solution for their individual application.

Add it all up – an extensive research and development process, state-of-the-art manufacturing capabilities, and a superior dealer network – and you have a company dedicated to delivering leading edge products for both today and far into the future. More reasons why CLARK is Built to Last®.

"CLARK TOTALIFT and Built to Last are registered in the U.S Patent and Trademark office. The "Hot Yellow Green" also known as "CLARK Green" is a trademark registered in the U.S Patent and Trademark office."

59-894-0198

CLARK MATERIAL HANDLING COMPANY
North American Headquarters
700 Enterprise Drive • Lexington, KY 40510
866-252-5275 • **www.CLARKmhc.com**

CGC 40/50/55
59-894-0198 Printed in USA OTP04201.25M
© 2020 CLARK Material Handling Company